MCU

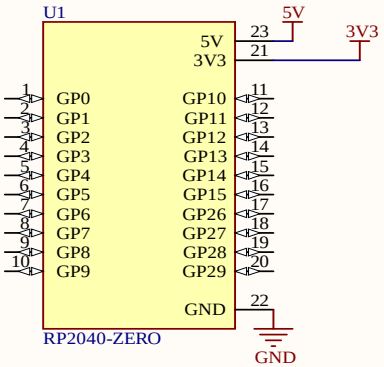

Cannot open file X:\knoobs\IMG\Waveshare-rp2040-zero-Raspberry-Pi-Pico-alternative-pinout.jpg. File does not exist.

SURFACE

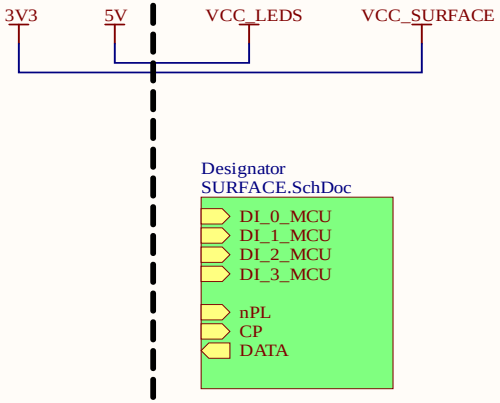

Title		
Size A4	Number	Revision
Date: 3/11/2026	Sheet of	
File: C:\Users\..\MANOPOLATORE_2040_EURO.SchDoc	Drawn by:	

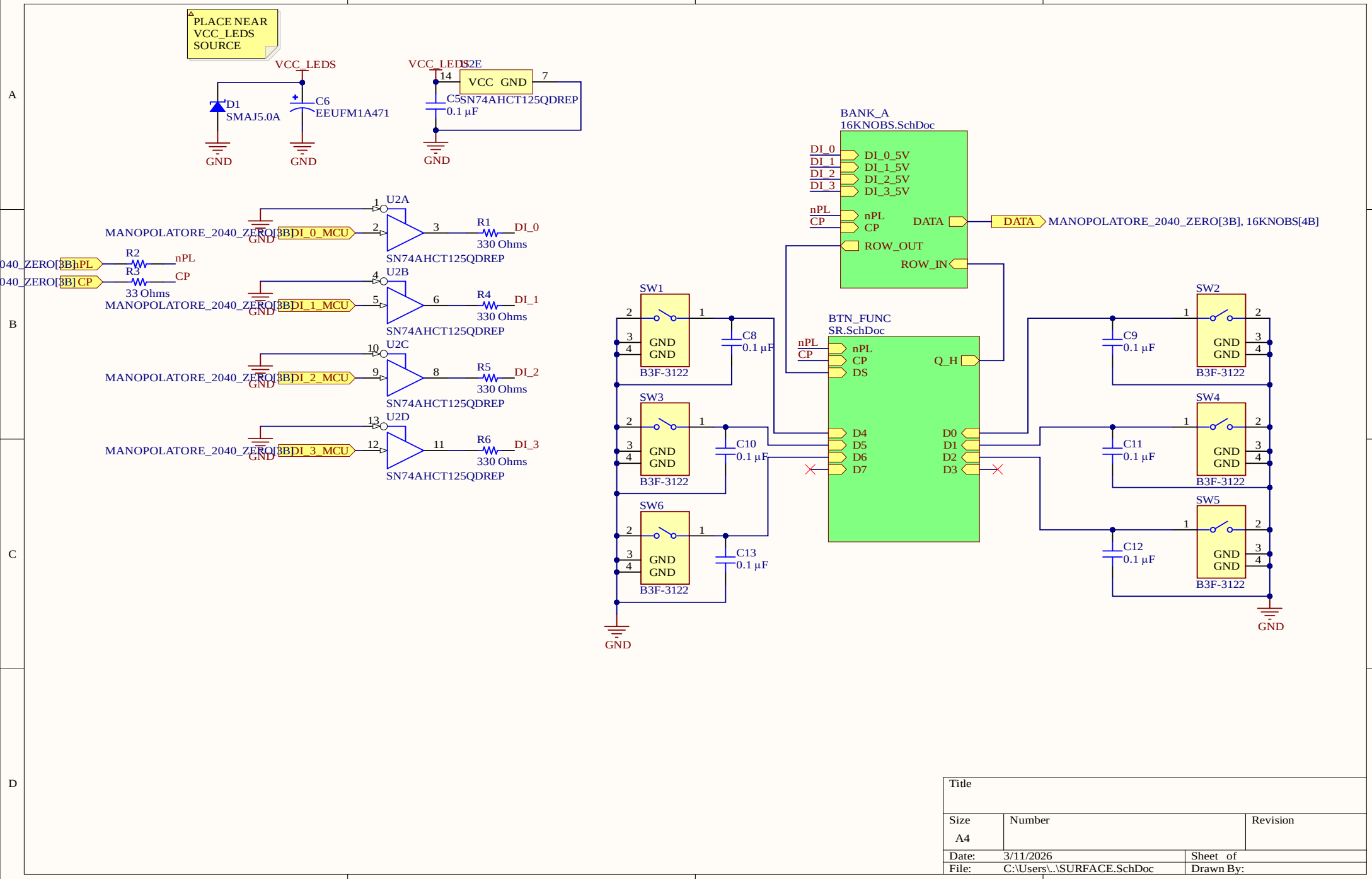

Title		
Size A4	Number	Revision
Date: 3/11/2026		Sheet of
File: C:\Users\..\SURFACE.SchDoc		Drawn By:

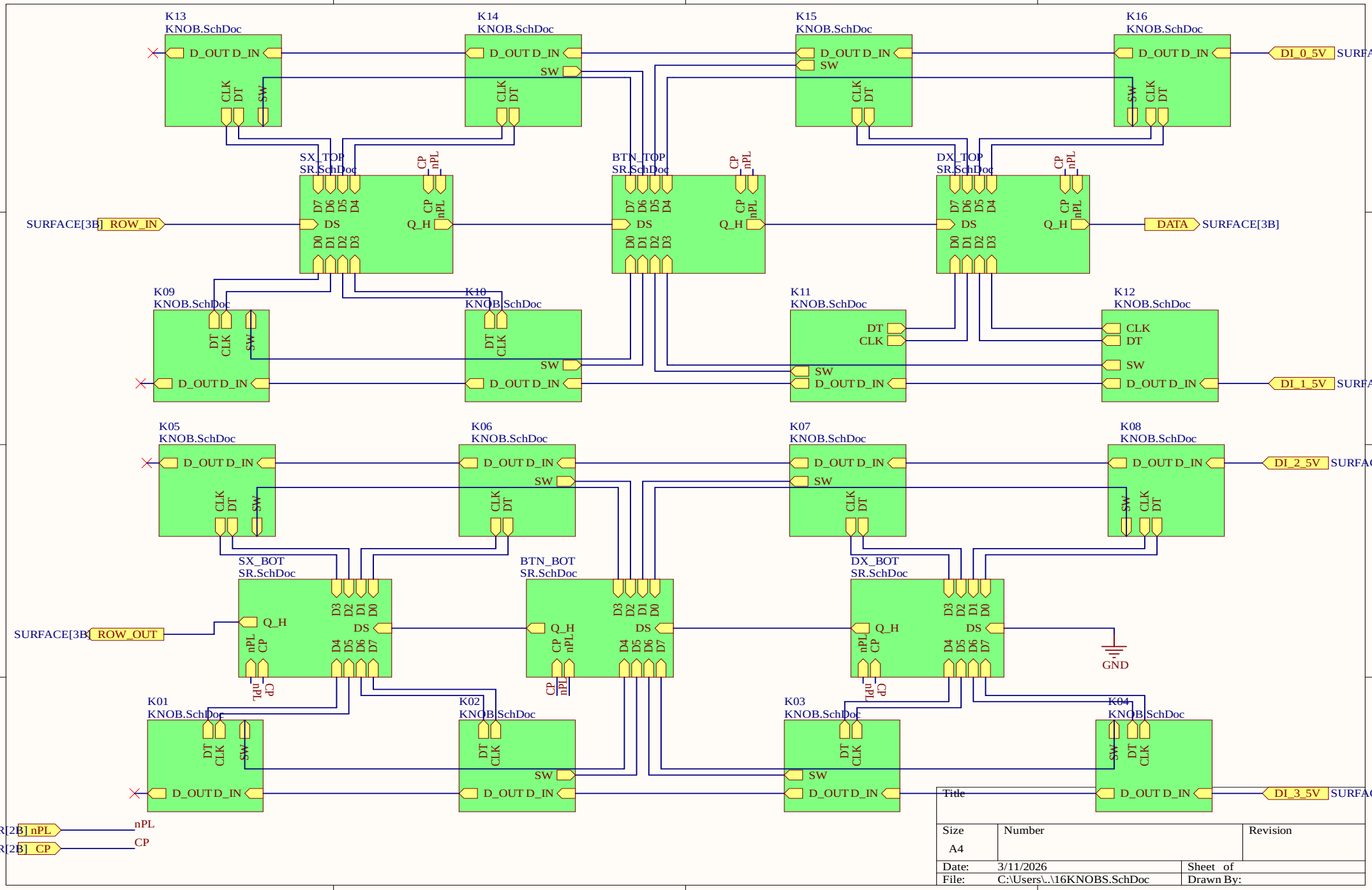
K13
KNOB.SchDoc
K14
KNOB.SchDoc
K15
KNOB.SchDoc
K16
KNOB.SchDoc
D_OUT D_IN
CLK
DT
SW
DI_0_5V
SURFACE
SX_TOP
SR.SchDoc
BTN_TOP
SR.SchDoc
DX_TOP
SR.SchDoc
D7 D6 D5 D4
D0 D1 D2 D3
DS
Q_H
CP
nPL
SURFACE[3B]
ROW_IN
DATA
K09
KNOB.SchDoc
K10
KNOB.SchDoc
K11
KNOB.SchDoc
K12
KNOB.SchDoc
DI_1_5V
K05
KNOB.SchDoc
K06
KNOB.SchDoc
K07
KNOB.SchDoc
K08
KNOB.SchDoc
DI_2_5V
SX_BOT
SR.SchDoc
BTN_BOT
SR.SchDoc
DX_BOT
SR.SchDoc
ROW_OUT
GND
K01
KNOB.SchDoc
K02
KNOB.SchDoc
K03
KNOB.SchDoc
K04
KNOB.SchDoc
DI_3_5V
], SR[2B] nPL
], SR[2B] CP
nPL
CP
Title
Size
A4
Number
Revision
Date: 3/11/2026
Sheet of
File: C:\Users\..\16KNOBS.SchDoc
Drawn By:

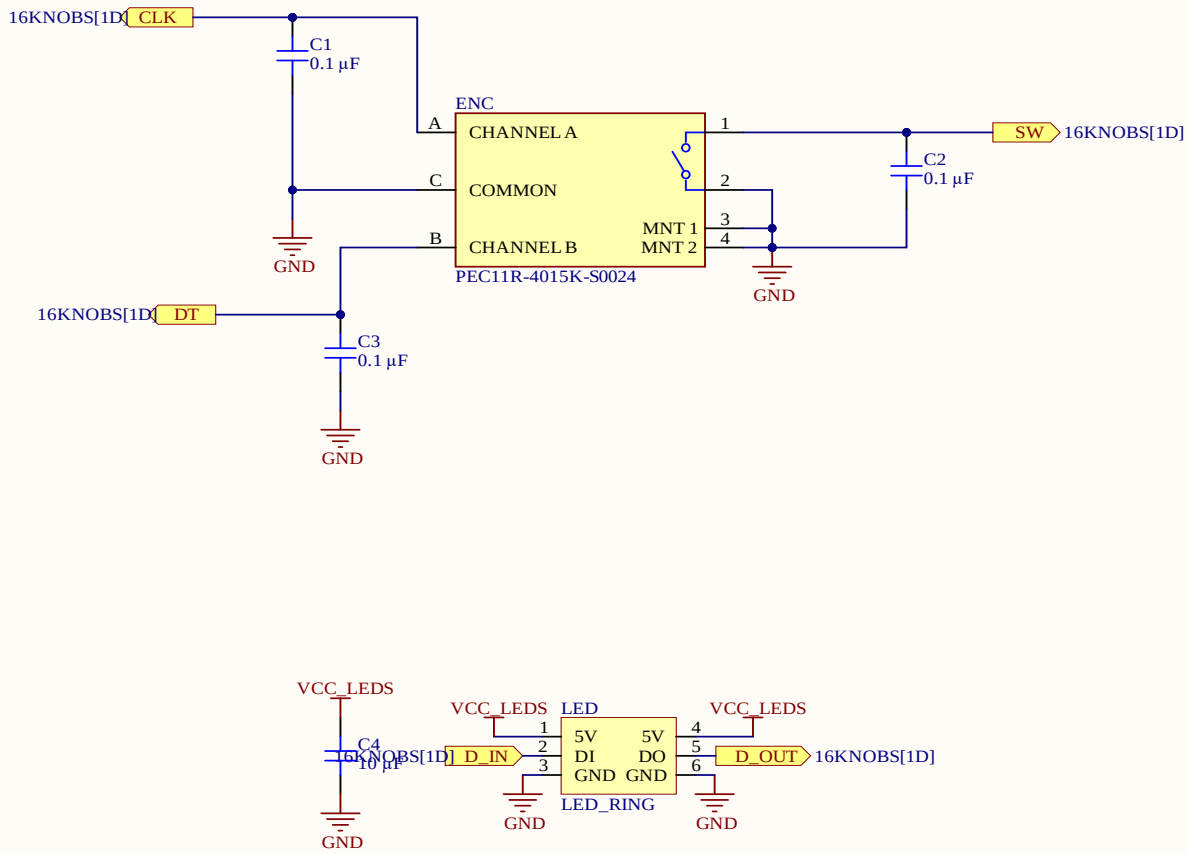

Title		
Size A4	Number	Revision
Date: 3/11/2026		Sheet of
File: C:\Users\..\KNOB.SchDoc		Drawn By:

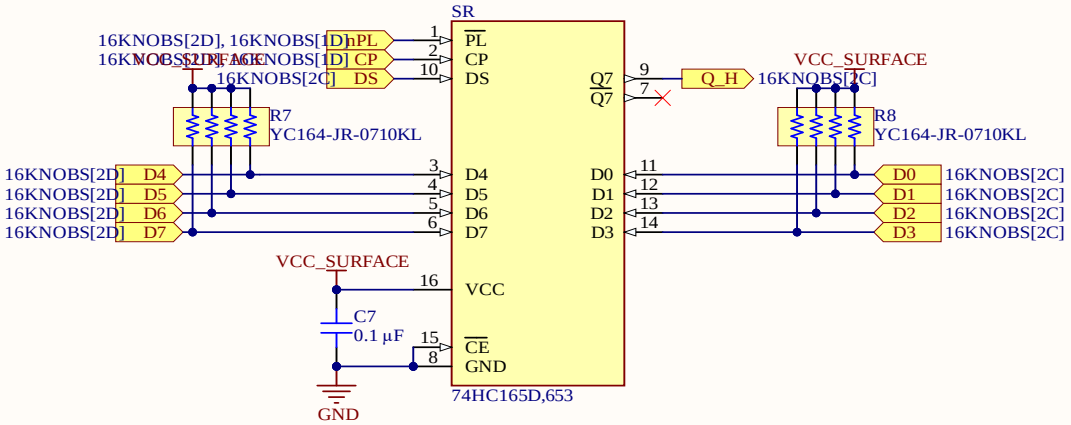

Title		
Size A4	Number	Revision
Date: 3/11/2026	Sheet of	
File: C:\Users\..\SR.SchDoc	Drawn By:	